Thumbs Up
Sound System Diagram

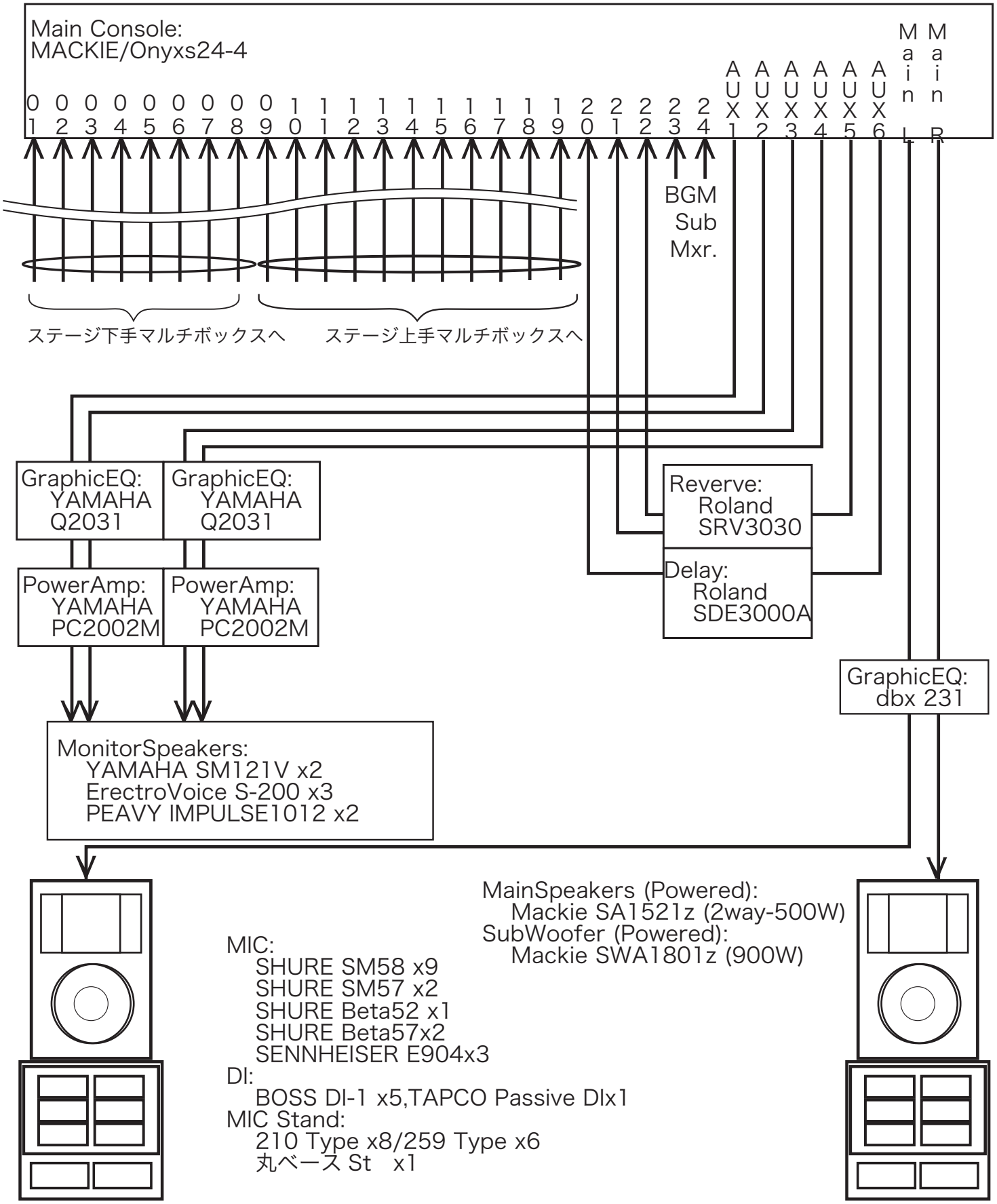

2010.2.28 Rev.4